By Sorelle - A Division of C & T International, Inc.
46 Whelan Road, East Rutherford, N.J.07073 U.S.A.
Tel, +1(201) 531 1919 Fax, +1(201) 531 1920
Website: www.sorellefurniture.com

Urban Crib
Assembly Instruction

Important Information:
Read all instructions **BEFORE** assembling crib.
KEEP INSTRUTIONS FOR FUTURE USE.

Made in HY, China

Crib Warnings

⚠WARNING:

*Infants can suffocate on soft bedding. Never add a pillow or comforter. Never place additional padding under an infant.
*Failure to follow these warnings and the assembly instructions could result in serious injury or death. DO NOT use this crib if you cannot exactly follow the accompanying instructions.
*To reduce the risk of SIDS, pediatricians recommend healthy infants be placed on their backs to sleep, unless otherwise advised by your physician.
***Strangulation Hazard:** STRINGS CAN CAUSE STRANGULATION! **Do not** place items with a string around a child's neck, such as hood strings or pacifier cords. **Do not** suspend strings over a crib or attach strings to toys.
***Strangulation Hazard:** To help prevent strangulation tighten all fasteners. A child can trap parts of the body or clothing on loose fasteners.
***Strangulation Hazard: Do not** place crib near window or patio door where cords from blinds or drapes may strangle a child.
***Fall Hazard:** When child is able to pull to a standing position, set mattress to lowest position and remove bumper pads, large toys and other objects that could serve as steps for climbing out. This crib has an adjustable mattress support. For the convenience of the parent when the baby is very small, the mattress support may be used in the highest position. Important: with the mattress support and mattress in the highest position, be absolutely sure that the top of the front crib side is at least 3 inches higher than the top surface of the mattress. If it is not, lower the mattress support and the mattress to the next highest position.
***Fall Hazard:** Stop using crib when child begins to climb out or reaches a height of 35in. (89cm), whichever occurs first. The child should be placed in a youth or regular bed.
*Check this product for damaged hardware, loose joints, loose bolts or other fasteners, missing parts, or sharp edges before and after assembly and frequently during use. Securely tighten loose bolts and other fasteners. **Do not use crib** if any parts are missing, damaged or broken. Contact C&T International Inc. for replacement parts and instructional literature if needed. Do not substitute parts.
*Follow warnings on **all** products in a crib.
*If refinishing, use a non-toxic finish specified for children's products.
***Never** use plastic shipping bags or other plastic film as mattress covers because they can cause suffocation.
*Infants can suffocate in gaps between crib sides and a mattress that is too small.
*Ensure a safe environment for the child by checking regularly, before placing the child in the crib, that every component is properly and securely in place.
*To avoid head injury, do not allow any child to play underneath the crib.

CAUTION : ANY MATTRESS USED IN THIS CRIB MUST BE AT LEAST 27 1/4" (69CM) x 51 5/8" (131 CM) WITH A THICKNESS NOT EXCEEDING 6" (15CM).

NOTES ON ASSEMBLY:
-During the assembly process whenever using screws or bolts, check each by placing the screw/bolt on the diagram of the item which is drawn actual size and design. Be sure to use the proper size and shape specified in the instructions.
-To assemble this unit you may be required to place the unit on it's side and face. It is strongly recommended that assembly is done on a soft, non-abrasive surface to avoid damaging the finish.

NOTES ON USE:
Keep children and others safe by following these simple rules:
- **Do not** allow any child to play on furniture
- **Do not** allow climbing on any piece of furniture.
- **Do no**t allow hanging from any piece of furniture.
- Always monitor your child's activity when in the nursery.

NOTES ON CARE AND MAINTENANCE:
- **Do not** scratch or chip the finish.
- Inspect the product periodically, contact C&T International Inc. for replacement parts or questions.
- **Do not** store the product or any parts in extreme temperatures and conditions such as a hot attic or a damp, cold basement. These extremes can cause a loss of structural integrity.
-To preserve the luster of the high quality finish on your product, it is recommended to place a daily or felt pad under any items you place on the finish.
-Clean with a damp cloth, then a dry cloth to preserve the original luster and beauty of this fine finish.
-**Do not** use abrasive chemicals.
-**Do not** spray cleaners directly onto furniture.
-Lift slightly when moving on carpeting to prevent leg breakage.
-Use of a vaporizer near furniture will cause wood to swell and finish to peel.

Crib Assembly Parts

(A) Head Board (1 pc)
(B) Foot Board (1 pc)
(C) Left Side Frame (1 pc)
(C1) Right Side Frame (1 pc)
(D) Mattress Support (1 pc)

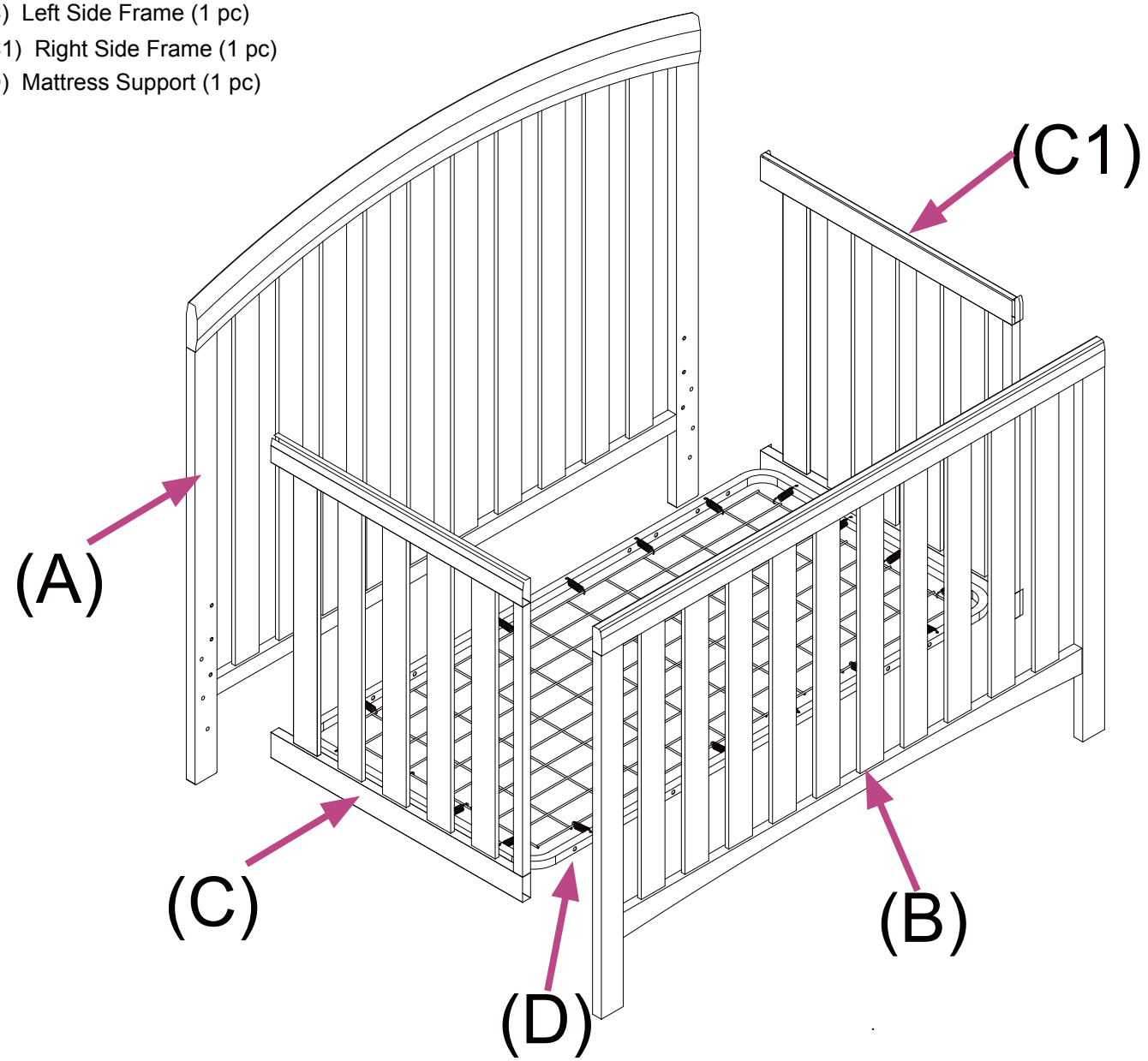

Hardware List

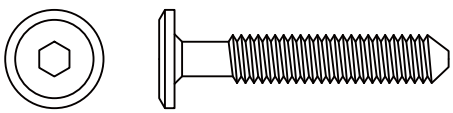

(a) M6 x 35mm Allen bolt (8 pcs)

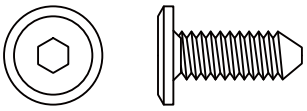

(b) M6 x 15mm Allen bolt (4 pcs)

(c) Allen Key (1 pcs)

Crib Assembly Steps

Step 1

Connect Sideframes to Headboard as Figure 1 shows.

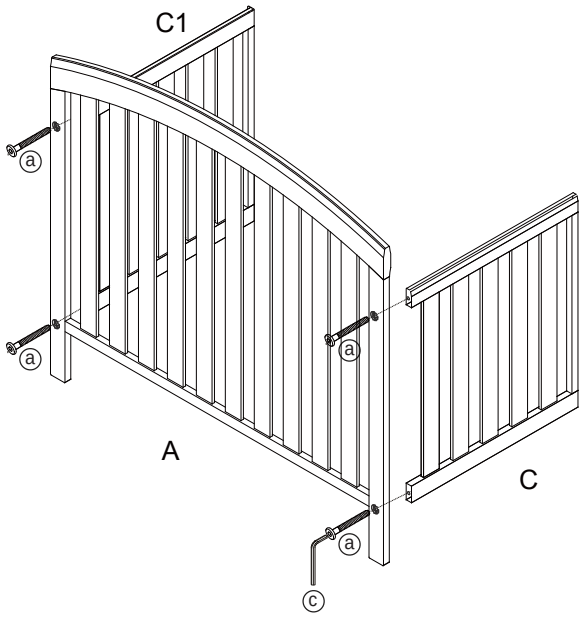

Figure 1

Step 2

FootBoard(B) Assembled as Figure 2 shows.

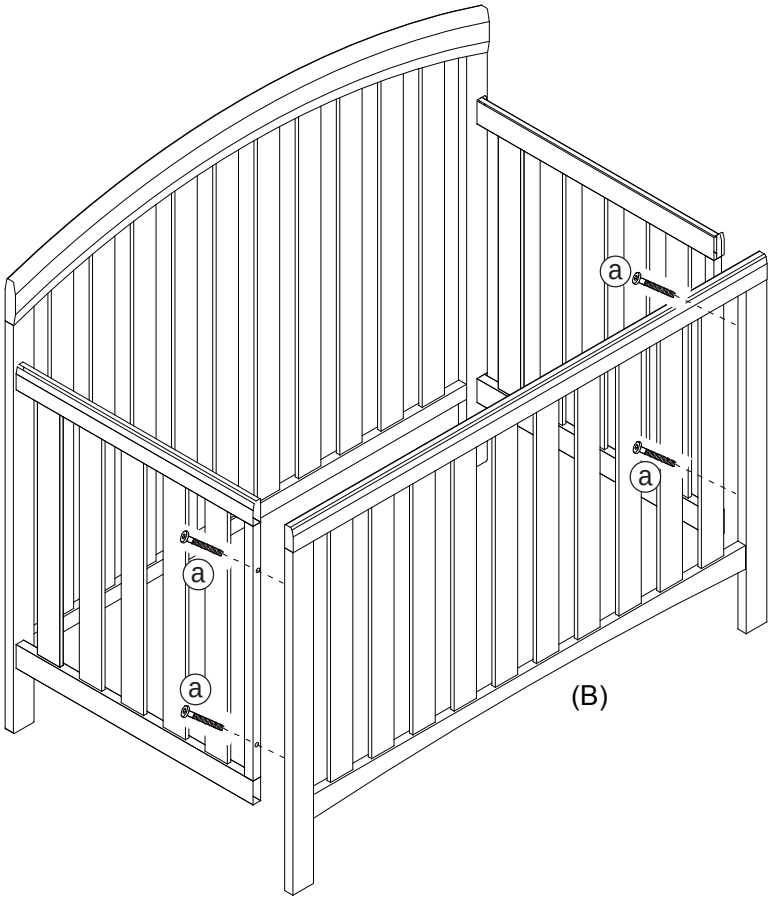

Figure 2

Crib Assembly Steps

Step 3

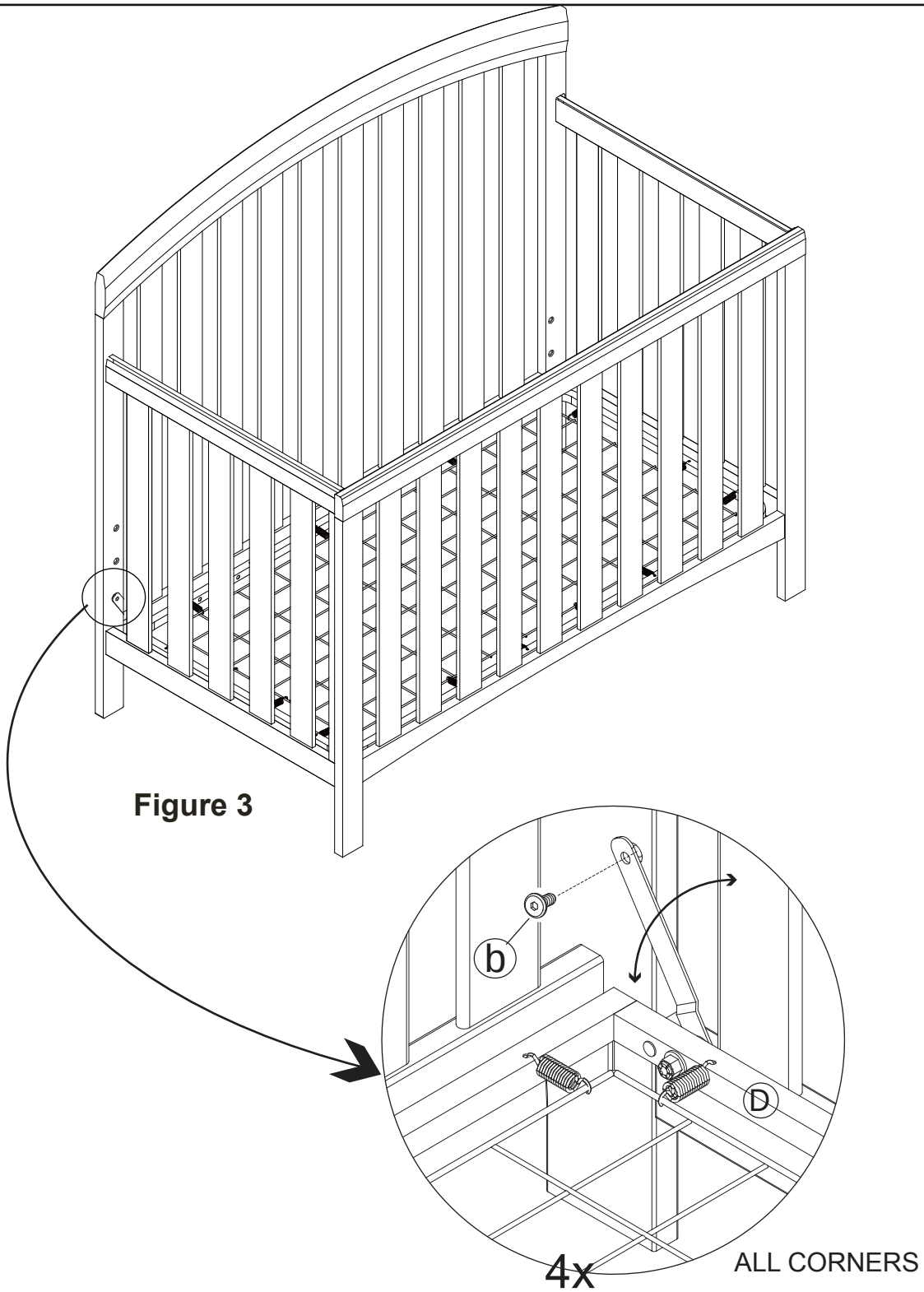

Figure 3

Install the Metal Support (D) to the crib as Figure 3 shows.

NOTE: This crib has a high position setup for use during your baby's first months. As soon as your baby starts to sit up,you must use the lowest mattress level.

Your crib is now ready to use.

TODDLER BED and FULL SIZE BED ASSEMBLY (Option Purchase)

Note: The Toddler rail (#144) and Adult rail (#221) are sold separately to convert the crib to a Toddler bed and a full size bed for your choose. These items may not always be available.

Contact the store where you purchased the crib or visit www.sorellefurniture.com to locate a dealer near you.

Toddler Bed Warnings

⚠WARNING

INFANTS HAVE DIED IN TODDLER BEDS FROM ENTRAPMENT.
Openings in and between bed parts can entrap head and neck of a small child.
NEVER use bed with children younger than 15 months.
ALWAYS follow assembly instructions.
The maximum user weight is 50lbs (22.7kg)

⚠WARNING

STRANGULATION HAZARD
NEVER place bed near windows where cords from blinds or drapes may strangle a child.
NEVER suspend strings over a bed.
NEVER place items with a string, cord, or ribbon, such as hood strings or pacifier cords, around a child's neck. These items may catch on bed parts.

⚠CAUTION

ENTRAPMENT HAZARD
To avoid dangerous gaps, any mattress used in this bed shall be a full-size crib mattress at least 51 5/8 in (1310mm) in length, 27 1/4 in (690mm) in width and 4 in (100mm) in thickness. The mattress thickness must not exceed 6 in (150mm).

Disassembling Crib for Storage

To disassemble crib for storage, follow assembly steps in reverse.

Store all parts and hardware together in a safe place. Store the instruction manual in the supplied envelope attached to mattress support base for future reference for reassembly.

Cleaning and Storage

To clean, use only mild household soap and warm water. **DO NOT** use bleach or detergent. **DO NOT** use abrasive cleaners which can scratch the finish. Use clean soft cloths to wash, rinse and dry. With proper care, the quality finish will last a long time. Wood surfaces may be treated with a light application of a good grade of non-toxic furniture polish. Read contents on back of polish to make sure polish will not harm unit.

Store all parts from Crib, which are not used for Full Size Headboard, in original carton(s) (if available) to prevent damage and allow reuse.